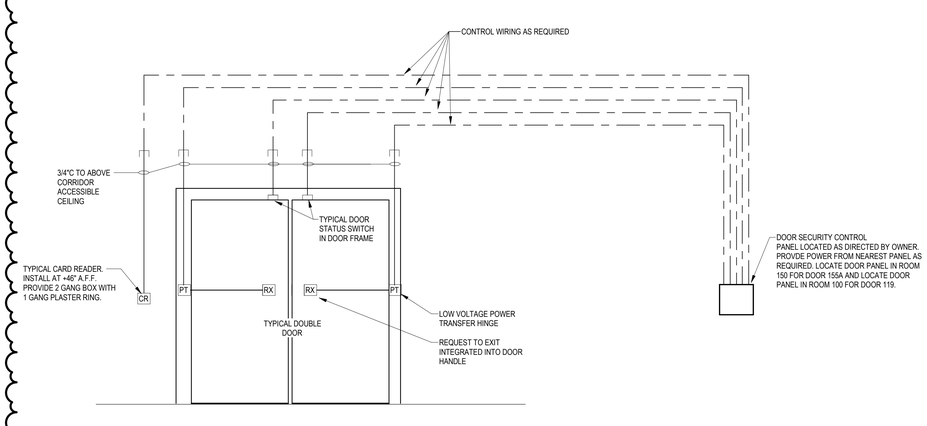

2 CARD READER INSTALLATION DETAIL
Not to Scale

DOOR ACCESS CONTROL SYSTEM

1. DOOR HARDWARE (ELECTRIC STRIKE, ELECTRIC LOCKSET, ELECTRIC PANIC BARS, ETC.) AND DOOR-ACCESS DEVICES (DOOR POSITION SENSOR, POWER TRANSFER DEVICE, REX, ETC.) IS PROVIDED AND INSTALLED BY CONTRACTOR.

2. CARD READERS ARE PROVIDED AND INSTALLED BY CONTRACTOR. PROVIDE ALLEGION / SCHLAGE MT15, BLACK COLORED. WHERE APPROVED BY OWNER, THE MULLION-MOUNTED VERSION, ALLEGION / SCHLAGE MT11, IS AN ACCEPTABLE CARD READER.

3. A MULTI-CONDUCTOR CABLE FROM THE DOOR-ACCESS CONTROL SYSTEM CABINET TO EACH DOOR IS PROVIDED AND INSTALLED BY CONTRACTOR. PROVIDE BELDEN COMPOSITE CABLE, PART NO. 53BAFS, OR APPROVED EQUAL. ONE CABLE PER DOOR IS REQUIRED, AND MUST BE INSTALLED WITHOUT SPLICES.

   A. CABLE CONNECTIONS TO THE DOOR HARDWARE, DOOR-ACCESS DEVICES, AND CARD READERS ARE PROVIDED BY CONTRACTOR.

   B. CABLE TERMINATIONS AT THE DOOR-ACCESS CONTROL PANELS ARE PROVIDED BY OWNER. CONTRACTOR SHALL LEAVE MINIMUM 5' SLACK OF MULTI-CONDUCTOR CABLE AT DOOR-ACCESS CONTROL SYSTEM CABINET.

4. THE DOOR-ACCESS CONTROL SYSTEM CABINET IS PROVIDED BY OWNER AND INSTALLED BY CONTRACTOR.

5. POWER AND UITS DATA CONNECTIONS AT THE DOOR-ACCESS CONTROL SYSTEM CABINET SHALL BE PROVIDED AND INSTALLED BY CONTRACTOR. PROVIDE 120V, 20A CIRCUIT FROM NEAREST PANEL. PROVIDE (1) CAT 6A DATA CABLE TO IDF.

6. DOOR-ACCESS CONTROL PANELS ARE PROVIDED AND INSTALLED BY OWNER INSIDE THE DOOR-ACCESS CONTROL SYSTEM CABINET.

7. INTEGRATION OF THE DOOR-ACCESS CONTROL SYSTEM INTO THE IU CAMPUS SECURITY SYSTEM IS PROVIDED BY OWNER

8. THE DIMENSIONS OF THE DOOR-ACCESS CONTROL SYSTEM CABINET ARE 20"W X 16"T X 6"D. THIS IS A SURFACE MOUNTED CABINET THAT IS TO BE WALL MOUNTED +6'-0" AFF TO TOP OF CABINET. THE CONTRACTOR NEEDS TO INSTALL (1) DUPLEX RECEPTACLE (DEDICATED POWER CIRCUIT) AND (1) UITS DATA PORT INSIDE THE CABINET. EACH CABINET CAN ACCOMMODATE (4) DOOR-ACCESS CONTROL PANELS.

9. ADDITIONAL DOOR-ACCESS CONTROL SYSTEM CABINETS MAY BE REQUIRED DUE TO THE NUMBER OF DOORS BEING CONTROLLED. LOCATION OF THESE CABINETS MUST BE APPROVED BY OWNER. COMMUNICATION CABLE BETWEEN DOOR-ACCESS CONTROL SYSTEM CABINETS IS PROVIDED AND INSTALLED BY CONTRACTOR. COMMUNICATION CABLE TERMINATIONS SHALL BE BY OWNER. CABLE TO BE USED IS EIA RS-485 2-WIRE WITH PLENUM RATED JACKET, BELDEN 82841, OR APPROVED EQUAL.

LOW-VOLTAGE CONDUCTOR COLOR CODING TABLE

CONDUCTOR	480Y/277V SYSTEM	208Y/120V SYSTEM
A PHASE	BROWN	BLACK
B PHASE	ORANGE	RED
C PHASE	YELLOW	BLUE
NEUTRAL	GRAY	WHITE
GROUND	GREEN W/ YELLOW STRIPE	GREEN

1. CONDUCTORS COLOR CODE SHALL BE PERMANENT TYPE AND BE PART OF CONDUCTOR COVERING OR OUTER INSULATION (COLORED JACKET).

SCHEDULE OF FIRE ALARM DETECTION APPLICATIONS

LOCATION	DETECTOR TYPE							
	SI	SP	SB	SH	H165	H195	H210	HROR
LOBBIES AND VESTIBULES	Y	Y	Y	Y				Y
CORRIDORS (CLEAN)	Y	Y						
CORRIDORS (DIRTY)					Y			Y
STORAGE ROOMS	Y	Y			Y			
ELECTRICAL ROOMS AND CLOSETS					Y			
TELECOMMUNICATIONS ROOMS AND CLOSETS	Y	Y						
MECHANICAL ROOMS					Y	Y	Y	Y
DUCT DETECTORS	Y	Y		Y				
GENERATOR ROOMS							Y	

KEY:
SI = SMOKE DETECTOR, IONIZATION
SP = SMOKE DETECTOR, PHOTOELECTRIC
SB = SMOKE DETECTOR, PHOTOELECTRIC BEAM
SH = SMOKE DETECTOR, HIGH VELOCITY
H165 = HEAT DETECTOR, 165°F
H195 = HEAT DETECTOR, 195°F
H210 = HEAT DETECTOR, 210°F
HROR = HEAT DETECTOR, RATE OF RISE
Y = ACCEPTABLE APPLICATION

THE EXACT DEVICE INSTALLED IN ANY LOCATION SHALL BE BASED UPON EVALUATION OF ARCHITECTURAL PROGRAM STATEMENT, TYPES OF MATERIALS IN STORAGE, AIR VELOCITY, AMBIENT TEMPERATURE RANGE, ETC.

REV-20181001

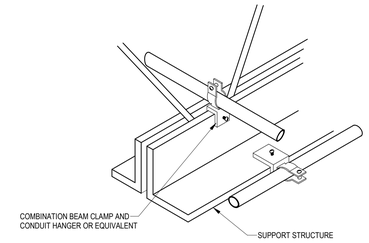

NOTE: FOR STEEL STRUCTURAL SYSTEM

1 2" AND SMALLER CONDUIT SUPPORT DETAIL
SCAIE: NONE

SCHEDULE OF RACEWAY APPLICATIONS

		APPLICATION	GRC	IMC	EMT	FMC	LFMC	RNC 40	RNC 80	HDPE 80	IU STD'S
FEEDER	IN	CONCEALED 2" AND LARGER OR EXPOSED	Y	Y							A2
		CONCEALED 1-1/2" AND SMALLER	Y	Y	Y						A2
	OUT	ABOVE GRADE	Y	Y							A2
		BELOW GRADE	Y					Y	Y	Y	
		CONNECTION TO VIBRATING EQUIPMENT					Y				
BRANCH	IN	CONCEALED 2" AND LARGER OR EXPOSED	Y	Y							
		CONCEALED 1-1/2" AND SMALLER	Y	Y	Y						
		EXPOSED IN ELECTRICAL CLOSET	Y	Y	Y						
		IN OR BELOW CONCRETE SLAB	Y					Y	Y		
	OUT	ABOVE GRADE	Y	Y							
		BELOW GRADE	Y	Y							
		CONNECTION TO VIBRATING EQUIPMENT					Y				
DUCTBANKS FOR ELECTRICAL UTILITY DISTRIBUTION			IDB	IDB				IDB	IDB		
TELECOMMUNICATION SLEEVES THROUGH FLOORS			Y	Y							
TELECOMMUNICATION RISERS, HOME RUNS, AND STATIONS			Y	Y	Y						
TELECOMMUNICATION BELOW GRADE									IDB	Y	
FIRE ALARM CIRCUITS CONCEALED AND IN DRY LOCATIONS			Y	Y	Y						
FIRE ALARM CIRCUITS EXPOSED OR IN MOIST LOCATIONS			Y	Y							
TEMPERATURE CONTROL			Y	Y	Y						

KEY:
GRC = GALVANIZED RIGID METAL CONDUIT
IMC = INTERMEDIATE METALLIC CONDUIT
EMT = ELECTRICAL METALLIC TUBING
FMC = FLEXIBLE METALLIC CONDUIT
LFMC = LIQUID TIGHT FLEXIBLE METALLIC CONDUIT
RNC 40 = RIGID NONMETALLIC CONDUIT, SCHEDULE 40
RNC 80 = RIGID NONMETALLIC CONDUIT, SCHEDULE 80
HDPE 80 = HIGH DENSITY POLYETHLENE, SCHEDULE 80
IDP = IN DUCT BANK
Y = ACCEPTABLE APPLICATION

REFER TO LISTED SECTION(S) FOR MORE DETAILS AND LIMITATIONS.

REV-20181001

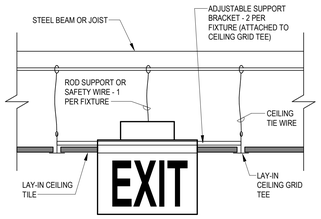

3 LAY-IN CEILING EXIT SIGN MOUNTING DETAIL
SCALE: NONE

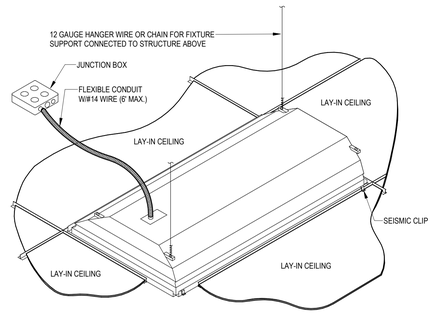

4 LAY-IN FIXTURE DETAIL
SCALE: NONE

GENESIS ENGINEERING GROUP
91 South Main Street Suite 200
Zionsville, IN 46077
(317)927-8307

VPS ARCHITECTURE
528 MAIN STREET SUITE 400
EVANSVILLE, IN 47708
(812) 423-7729

Certified By:
WILLIAM R. STAALEY REGISTERED No. 10200105 STATE OF INDIANA PROFESSIONAL ENGINEER

Revisions

Number	Date	Description
1	Date 1	Revision 1

Drawn By: BJW
Checked By: DS
Project Status: CONSTRUCTION DOCUMENTS
Date: 30 SEPT 2020

Title: ELECTRICAL DETAILS AND SCHEDULES - BASE BID
Project: 20192459 IUB BL573 Smith Research Center – HVAC Improvements
Indiana University
2805 East 10th Street Bloomington, IN 47408

This drawing and its contents are then property of Genesis Engineering Group, and shall not be reproduced in whole or in part by any means, mechanical or electronic, without express written permission of Genesis Engineering Group. Copyright 2013, by Genesis Engineering Group, inc.

Drawing Number:
E801

C:\Users\dshook\Documents\IU SMITH_GEG_r20_genesis14R26B.rvt
10/30/2020 4:00:39 PM